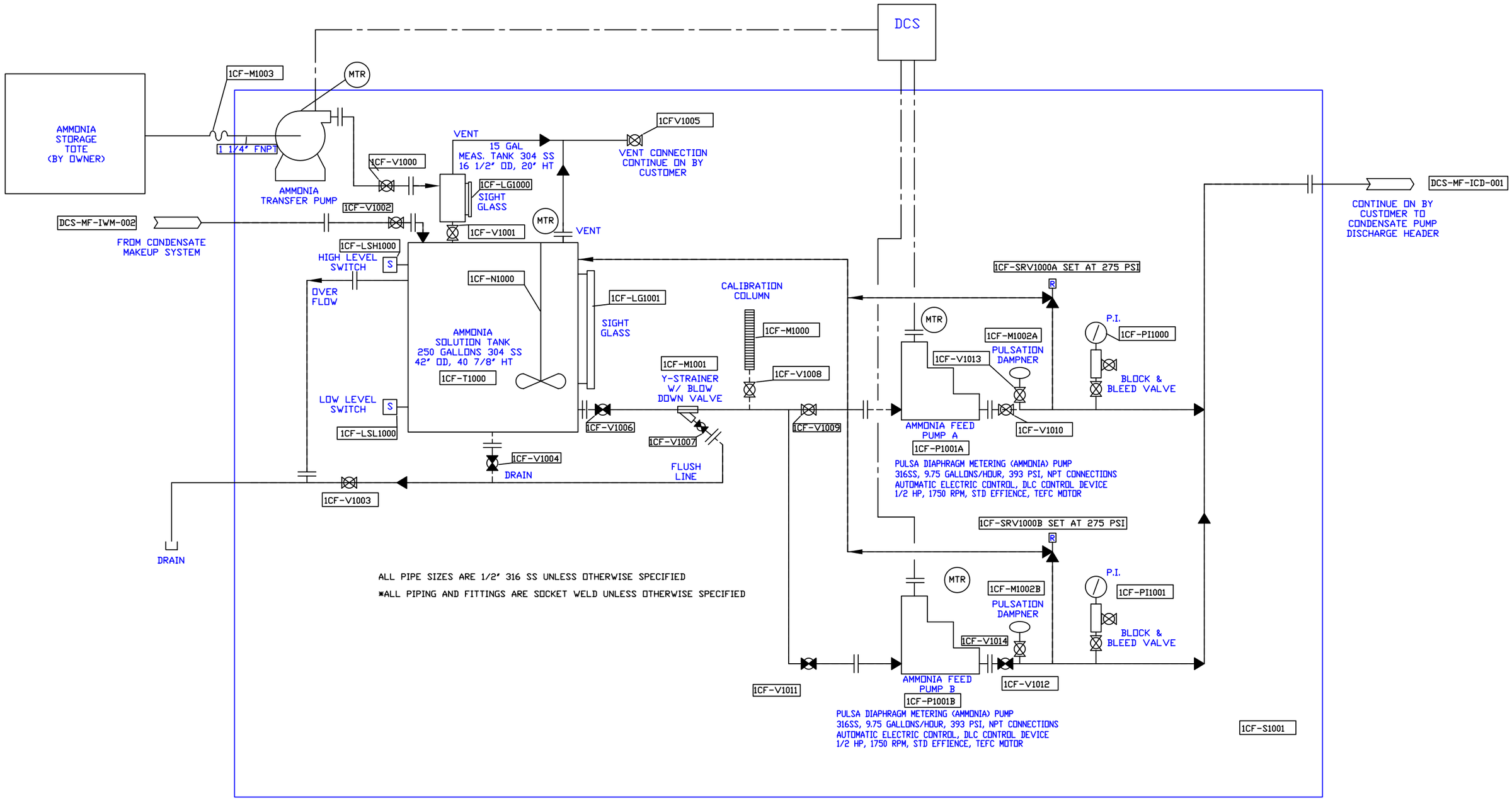

AMMONIA FEED SYSTEM